OceanServer TECHNOLOGY, INC

Intelligent Battery and Power System (IBPS) ™

MP-04SR/FR Battery Management Module

Data Sheet

The IBPS MP-04SR/FR gives equipment manufacturers a very small, drop-in solution for adding autonomous battery-based power to new or existing designs. For size and weight sensitive applications, the MP-04xx battery packs, based on Lithium-Ion chemistry, provides up to five times the power, at one-quarter of the weight, of comparable lead-acid battery systems. The MP-04xx can supports higher power requirements than the BB-04xx and also provides 380 Watt hours of rechargeable Lithium Ion battery power with all the battery channels fully populated.

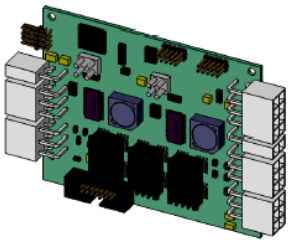

MP-04SR (Small Outline) Model

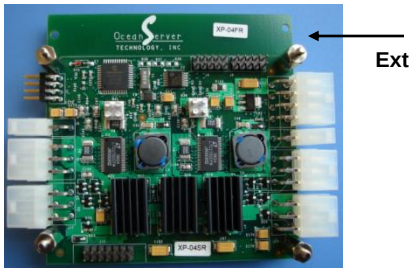

Extended PCB

MP-04FR (Full Size) Model

Basic Data for MP-04SR/FR
> Module Sizes MP-04FR 3.8" x 3.6" and MP-04SR 2.9" x 3.6"
> Max Power Limits: Current 20 Amps; Power 240 Watts
> Charge Current (Per Battery 4 Amps; Per Module 8 Amps)
> Charge DC Voltage 18-24 Volts; Charging Simultaneously Level III
> Battery Packs Supported 1-4 Smart Packs (Standard Packs 14.4V 95 Whr Pack)
> Standard Packs are 14.4V Nominal (Discharge Range 16.8 - 12 Volts)
> Controller Supports Both Mini Bats and Full Bats Monitoring Software
> RoHS Compliant; Visit OceanServer Download Page for Drawings and 3D Models
Optional DC-DC Converter Modules (Regulated Outputs)
> DC-123SR provides ATX Voltages 3.3V@10A Max, 5V@10A Max, 12V@ 12A Max (-12V standard)
> DC2U-1VR provides Regulated 19V, 24V, 28V or 48V (Jumper Selectable; 240 Watts Max)
> DC1U-1V provides Regulated 24V or 28V (Factory Set; 75 Watts Max)
Additional Information
> Supports Cluster Applications Utilizing CB-04 Communications Module

Note: The MP-04SR and MP-04FR are functionally identical

www.ocean-server.com

OceanServer TECHNOLOGY, INC

OceanServer Technology, Inc * 151 Martine Street * Fall River, MA 02723 * 508-678-0550 (voice)

MP Series Applications

The MP-04SR/FR modules can output up to 240 Watts of continuous power when used with four OceanServer 95 Watt Hour battery packs. The MP series modules offer a complete set of electronics that provide battery management and charging and optional high efficiency ATX Power supplies, DC-DC converters and Li-ion battery packs to power small portable devices or larger equipment. The MP-04xx modules are offered in two different sizes to fit virtually any mechanical design.

.....Make Any Device Battery Powered

All of the OceanServer Battery Management modules have an RS232 communication port that provides complete power system information about all of the battery packs connected. This information includes, fuel gauge, current, voltage, amp-hours, run time to empty, time to full charge, and 20 other critical battery parameters on a pack by pack basis

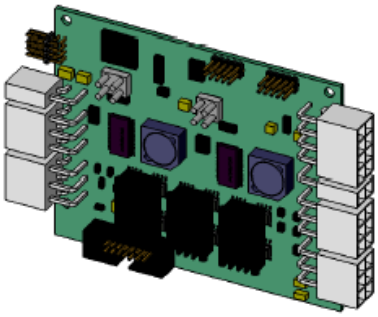

Multiple MP-04xx modules can be combined into battery clusters providing plug-n-play modular building blocks that let you build very large battery power systems using small safe Li-ion battery packs. These systems are ideal for powering robots, medical equipment, portable equipment, homeland security or military devices or just about anything that needs power.

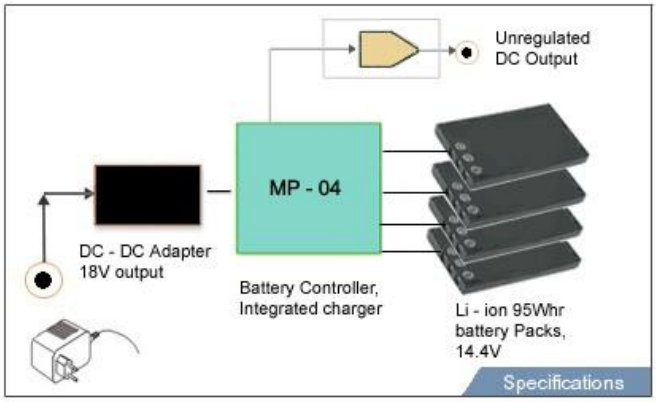

Example configuration showing a MP-04SR with 380 Watt Hours of Lithium Ion Rechargeable battery power

MiniBats Software

www.ocean-server.com

OceanServer TECHNOLOGY, INC

OceanServer Technology, Inc *151 Martine Street * Fall River, MA 02723 * 508-678-0550 (voice) 7/2010